CHMY 361 **Exam 4**

Tuesday, November 25, 2014 7:55-8:55 AM **Name** KEY _____
4 x 6 note card (both sides) Last, First
100 points in 9 questions on 5 pages.

For full credit show all work and put correct units on final answers. <u>All numerical answers to problems should make sense.</u> If you are computing energies, velocities, rates, molecular weights, times, etc. be aware of what is a reasonable answer and what is impossible. If you are unable to find a mistake you know must be there, estimate the answer and justify.

(12 pts) 1. The number of disintegrations per second of a sample containing radioactive atoms is found to be directly proportional to the number of radioactive atoms present, If there are 1000 disintegrations per second for a sample containing 10^{12} radioactive atoms, what is the half life of this isotope in seconds?

$$\text{rate} = 10^3 \text{ atoms s}^{-1} = K\, 10^{12} \text{ atoms}$$

$$K = \frac{10^3 \text{ atom s}^{-1}}{10^{12} \text{ atom}} = 10^{-9} \text{ s}^{-1}$$

$$f = \tfrac{1}{2} = e^{-K t_{1/2}} = e^{-10^{-9} s^{-1} t_{1/2}}$$

$$\ln \tfrac{1}{2} = -10^{-9} s^{-1} t_{1/2}$$

$$t_{1/2} = \frac{-0.693}{-10^{-9} s^{-1}} = 0.693 \times 10^{9}$$

$$= \boxed{6.93 \times 10^{8} \text{ s}}$$

(11 pts) 2. Consider the following mechanism of the reaction whose stoichiometry is given by:

A + B + C --> D + E

1) A + B <--> X (fast) forward rate constant = k_1; back rate constant = k_{-1}

RDS → 2) X + C --> D + E (slow) forward rate constant = k_2

What is the rate law predicted by this mechanism?

$$\text{Rate} = k_2 [C][X] \quad \text{but} \quad k_{-1}[X] = k_1 [A][B] \text{ (equilibrium)}$$

$$\therefore \boxed{\text{Rate} = k_2 \frac{k_1}{k_{-1}} [A][B][C]}$$

(11 pts) **3.** How many moles of photoproduct are produced by 100 watts of 500 nm light in 1000 seconds if the quantum yield is 0.01?

Moles product = moles photons × quantum yield

= energy of light (J) × mols photons J^{-1} × 0.01

= $\frac{\text{watts} \times \text{time}}{hc/\lambda}$ × 10^{-2} 6×10^{23} $\frac{\text{photons}}{\text{mol}}$

$$= \frac{(100\ J s^{-1} \times 1000\ s)}{(6\times10^{23})\frac{(6.62\times10^{-34} J s)(3\times10^{8} m s^{-1})}{500\times10^{-9} m}} \times 0.01$$

= **0.0042 moles photo product.**

(12 pts) **4.** (a) If 10 % (T) of a light beam is transmitted through a solution of dye when the path length is 1 cm, what is the absorbance?

$T = 10^{-A} = 10^{-1}$ ∴ $A = 1$

(b) If the same solution is now placed in a cell with a path length of 10 cm, what fraction (T) will be transmitted? $A = \epsilon c \ell$ so now $A = 10$ (10× larger)

$T = 10^{-10}$

(c) If the dye has a molar decadic extinction coefficient = 100,000, what is the concentration of this dye.

using either case $A = \epsilon c \ell$ $c = \frac{A}{\epsilon \ell}$

$$c = \frac{1}{10^5\ 1} = \frac{10}{10^5\ 10} = 10^{-5} M$$

(10 pts) 5. The absorption spectrum below is for a mixture of A and B. There are two electronic transitions shown for each, and the higher transition for B happens to have vibrational structure. If the solution is excited at the wavelength given by the arrow, draw the fluorescence spectrum expected, assuming that A and B absorb and fluoresce independently and equally well.

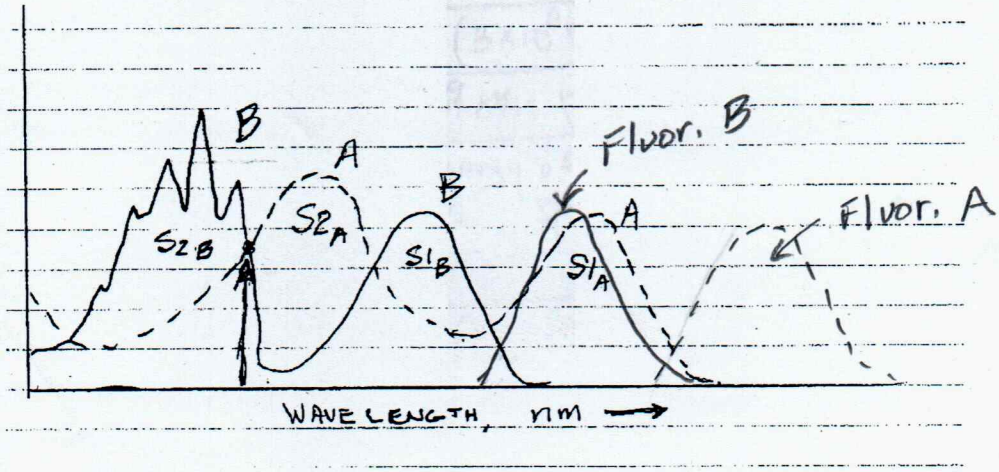

(11 pts) **6.** Match the items on left with appropriate items on the right by putting the letters in the box provided. More than one letter can and should be used when appropriate. There may be some letters that will not be appropriate for any item on the left.

b, d, c Can cause photochemistry

d Ionizes molecules (removes electrons

a (g) OK Excites molecular rotation

e, g Flips the spin of a proton in a large magnetic field

h, j Excites molecular vibration

a. 1 cm^{-1}
b. 30000 cm^{-1}
c. 600 nm
d. 1 A
e. 500 Mhz
f. 400 Khz
g. 50 cm → .02 cm^{-1} ≅ 500 Mhz
h. 9 μm
i. 600 m
j. 1000 cm^{-1}

600 m = 6×10^{4} cm → 0.16×10^{-4} cm^{-1}

(11 pts) 7. Calculate the electrostatic energy in kJ per mole for 2 helium nuclei and 1 electron placed at the corners of an equilateral triangle 2 Å on each side.

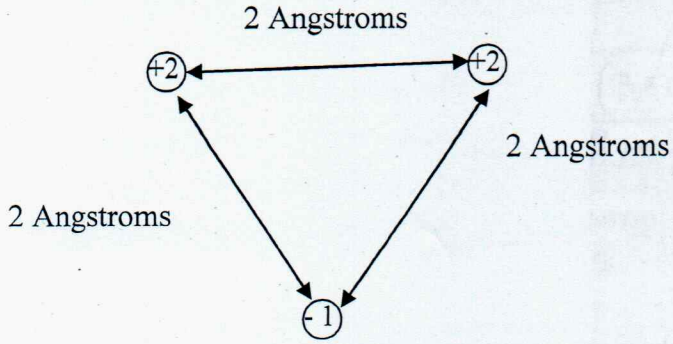

$$U = 1389 \times \left[\frac{(2)(2)}{2} + \frac{2(-1)}{2} + \frac{2(-1)}{2} \right] \text{ kJ/mol}$$

$$= 1389 \times [2 \quad -1 \quad -1] = 0$$

(11 pts) **8.** Write 4 quantum concepts and the corresponding mathematical equations. Define each of the symbols in the equations.

① quantization of energy $\Delta E = h\nu$

h = plancks const
ν = frequency of light

② particle nature of light $p = \frac{h}{\lambda}$

λ = wavelength " "
p = momentum of photon

③ wave nature of particles $\lambda = \frac{h}{p}$

p = momentum of particle
wavelength of particle.

④ quantization of angular momentum, (L)

$L^2 = \ell(\ell+1)\left(\frac{h}{2\pi}\right)^2 \quad \ell = 0, 1, 2, \ldots \; \frac{1}{2} \; \frac{3}{2} \ldots$

$L_z = m\, h/2\pi \quad m = -\ell \; -\ell+1 \ldots \; +\ell$

⑤ uncertainty principle or zero point energy.

$\Delta x \, \Delta p_x \cong h \qquad E_{\text{zero pt}} \cong \frac{h^2}{m \, \Delta x^2}$
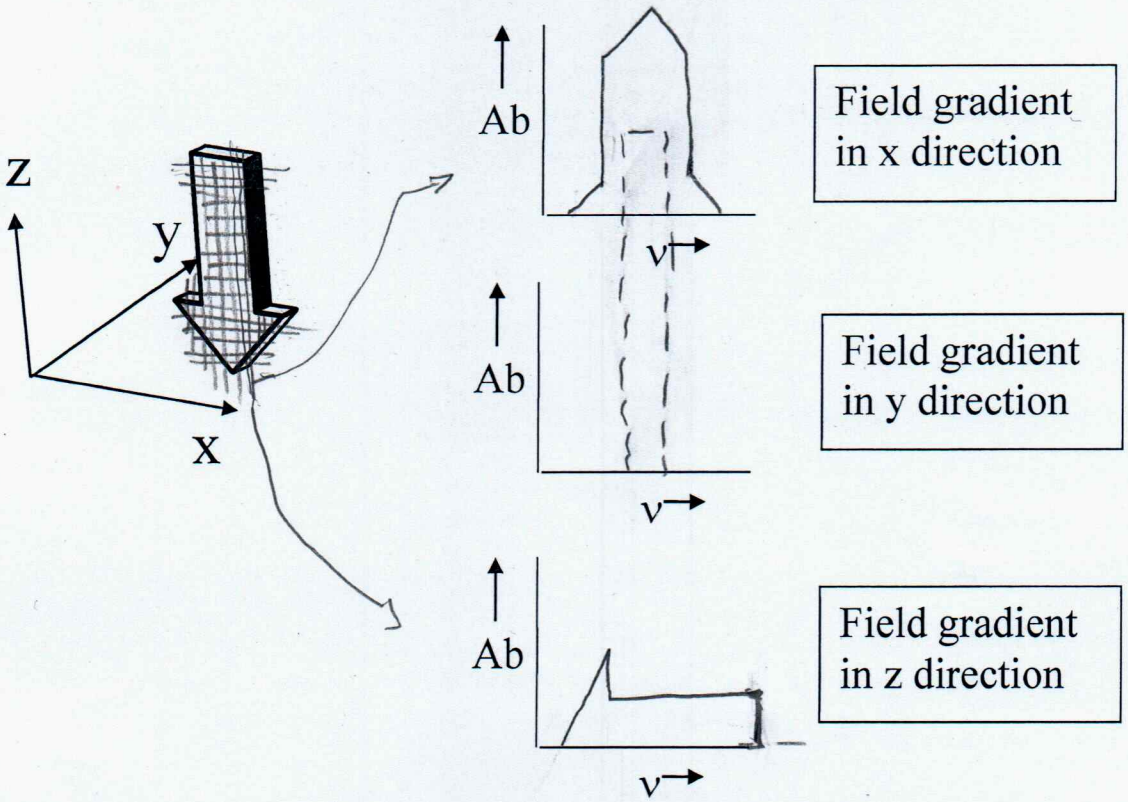
(11 pts) 9. If the shape depicted below is filled with water, draw curves that indicate the intensity of absorbed radio frequency energy during an MRI of this object when the magnetic field gradient is in the x, y, z directions. (Field strength increases with increasing x, or y, or z.)
The long axis of the arrow is parallel to z. The plane of the arrow is perpendicular to the y axis.